MV MX50

Diesel Powered
Water Heater
Instruction Manual
Ed 2.00

MV Heating UK Ltd
Unit 6
Second Avenue Business Park
Millbrook
Southampton
SO15 0LP

5kW Water Heater

MV Heating UK LTD
+44 (0)2380 522345

Preface

Thank you for purchasing the MV MX50 Water heater. This instruction book describes the structures, working principles, installation and operation of the MV MX50. For correct use of the heater, please read this instruction book carefully before installation and operation. The instruction book should be saved in a convenient place for later reference.

Attention

- This instruction book is subject to revision without notice, but will conform to the purchased product.
- This manual aims to answer all questions the user may have about the product, however; if you have any doubts or find anything incorrect in this manual, please contact us directly.
- Check the heater for any damage when unpacking and contact the dealer immediately if any damage is found.
- If any troubles arise during application, please contact MV Heating or the company who sold it to you. We shall do our best to provide service to you.

Contents

Introduction 3
Technical Data 4
Structure 5
Installation Angle 6
Coolant Circulation Diagrams 6
Gravity System in a Marine Installation 8
Figure IV 8
Air Intake and Exhaust Installation 10
Fuel Lines 13
Fuel Pump Angle & Suction Height 14
Fuel Line Connections 15
Angle of Fuel Filter 16
Fuel Standpipe 17
Operation 19
On/Off Switch Layout 19
Quick Reference Guide 20
Wiring Diagram 21
Maintenance 22
Fault Codes 23

Introduction

The MV MX50 is a 5kW modulating diesel fired water heater, which is suitable for providing hot water for heating purposes via radiators or matrix heaters and also domestic hot water via a calorifier. The MV MX50 is fully automatic in operation featuring low energy glow pin ignition and microprocessor control for full temperature regulation.

It has low servicing costs due to modular construction and its simple wiring means ease of installation.

It can be applied to various heating purposes, whether its hot water heating for easier living or engine pre-heating and demisting.

For both vehicle and marine markets, the MX50 is a great way to efficiently meet your heating needs.

This kit includes everything necessary for installation excluding plumbing to the radiators and calorifiers.

Technical Data

MV MX50 TECHNICAL DATA	
Fuel	Diesel
Power Supply	DC12V
Heating Medium	Coolant
Output (kW)	High Power 5.2 Low Power 2.5
Fuel Consumption (l/h)	High Power 0.61 Low Power 0.30
Operating Voltage	10.5 - 15V
Power Consumption	High Power 28W Low Power 18W
Coolant Operating Pressure	0.4 - 2.5 bar
Heat Exchanger Capacity	0.15L
Minimum amount of system coolant	4L
Minimumum Water Flow (l/h)	250
Allowable Range of CO2 Exhaust Gas	8 - 12%
Dimensions (± 3mm)	214(L) x 106(W) x 168mm(H)
Weight	2.9kg
Water Pump Power Consumption	14W
Water Pump Flow Rate	900 (l/h)

Structure

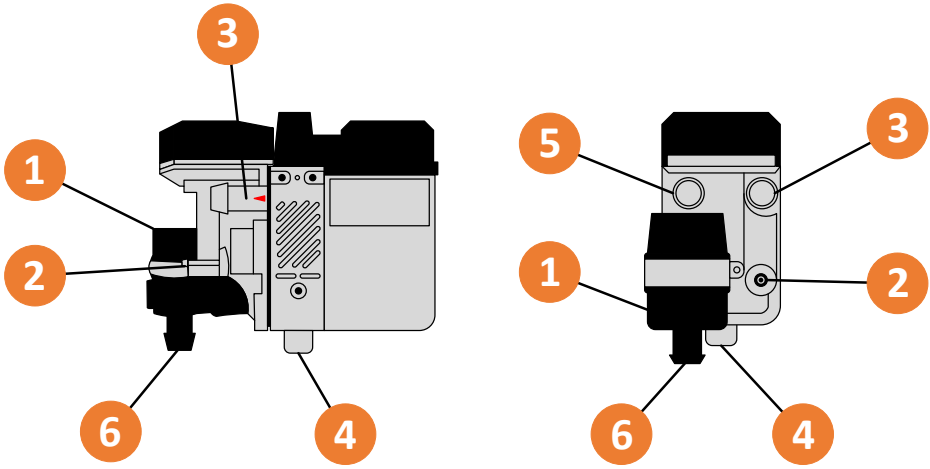

1. Water Pump

2. Fuel Inlet

3. Water Outlet

4. Exhaust Outlet

5. Combustion Air Inlet

6. Water Inlet

Figure I

Installation Angle

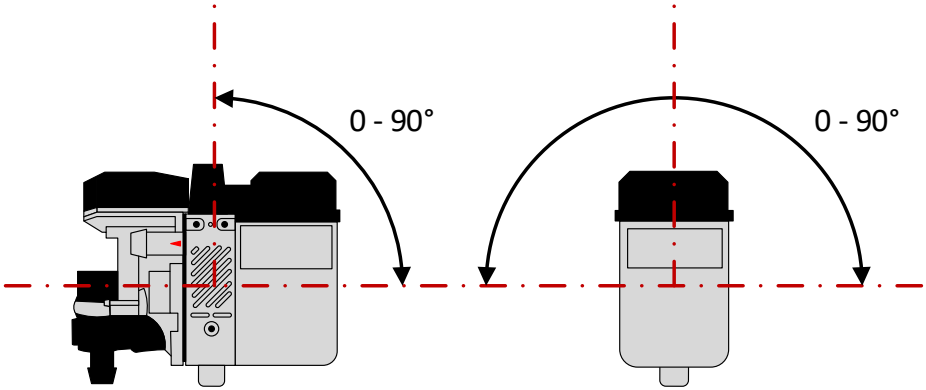

Figure IV

Coolant Circulation Diagrams

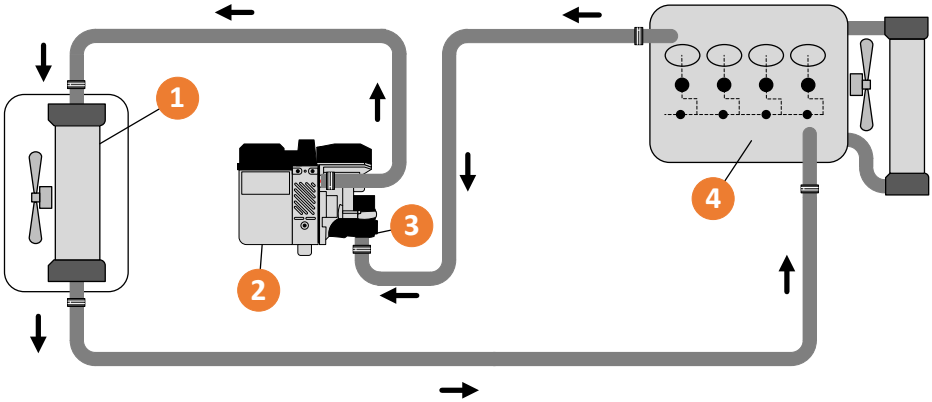

1. Matrix Heater
2. The Heater
3. External Water Pump
4. Engine

Figure II

Figure II shows the installation of the coolant circulation system in a marine or vehicle application, not using a bypass valve that plumbs into the engine.

Figure VIII shows the way to install the system in a vehicle, using the bypass valve.

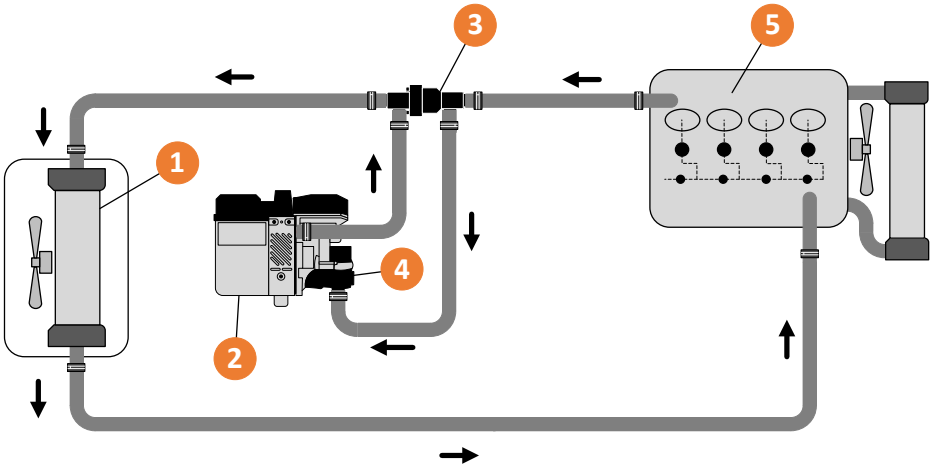

1. Matrix Heater
2. The Heater
3. Bypass Valve
4. External Water Pump
5. Engine

Figure III

To bleed the system, simply loosen the outlet hose from the heater and begin the system. Any excess air should immediately circulate out of the system and the hose can be re-tightened.

During installation, any existing coolant in the system should be flushed out with clean water and then re-filled with new coolant.

Ensure you use the right coolant specified for your vehicle.

+44 (0)23 8052 2345

Gravity System in a Marine Installation

Figure IV

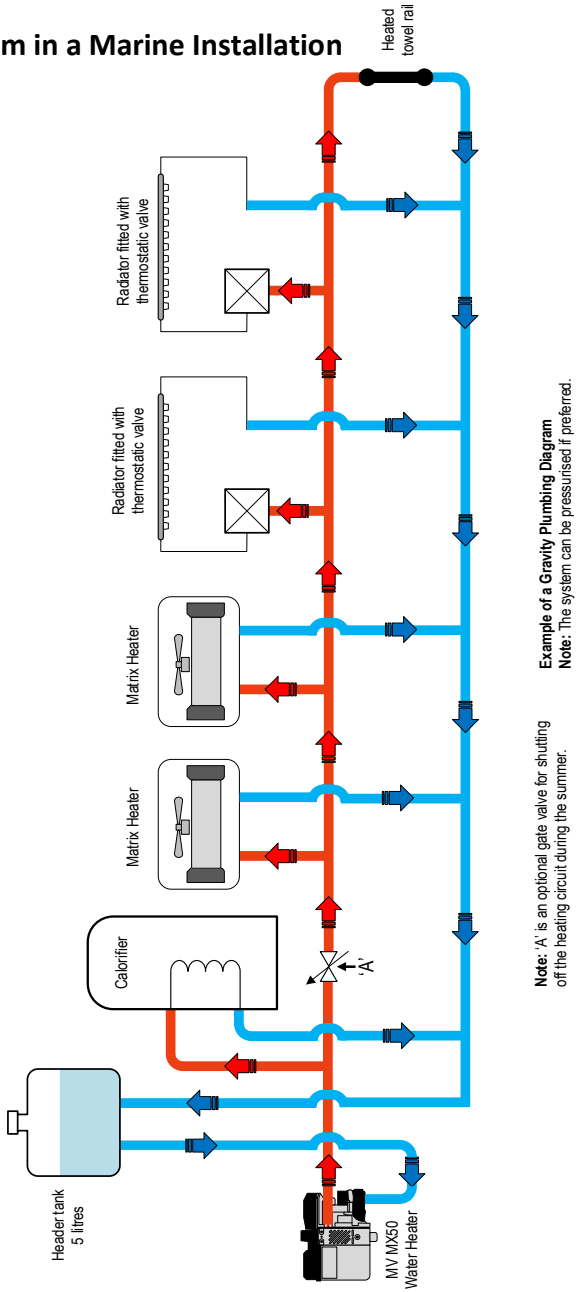

Example of a Gravity Plumbing Diagram
Note: The system can be pressurised if preferred.

Note: 'A' is an optional gate valve for shutting off the heating circuit during the summer.

Figure IV shows a simple layout of how to install the MX50 into a marine application using a gravity fed system.

As shown by the diagram, a twin pipe header tank with the return flow passing through it, will act as a permanent auto bleed in the system, any air returning to the heater will come out in the header tank. Antifreeze should be added up to 30% to prevent the coolant from freezing.

Optional service valves can be fitted at point ‘S’. This will enable faster and easier removal of the heater without introducing air into the system.

Pipework: All pipework should be in 22mm. 15mm should only be used on the return from the matrix heaters, radiators and/or towel rail.

Note: Use some lubrication such as silicone spray to ease fitting of the water pipe onto the heater.

Air Intake and Exhaust Installation

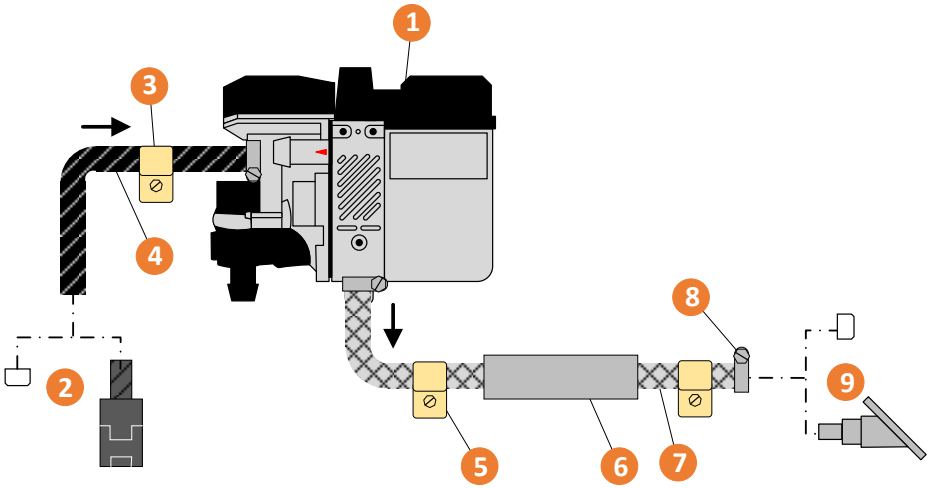

1. Heater
2. Air Silencer or End Cap
3. P-Clip
4. 22mm Combustion Air Intake
5. Exhaust P-Clip
6. Exhaust Silencer
7. 22mm Exhaust with End Cap
8. Exhaust Pipe Clamp
9. 22mm Exhaust end cap or skin fitting

Figure V

Figure V shows the installation of the air intake and exhaust. Make sure you only use the appropriate pipes provided and use the clamps to secure them in position.

The air inlet pipe is used to bring in combustion supporting air into the furnace of the heater from outside of the vehicle and should ideally be faced downward to ensure that the air is clean and doesn't clog up the pipe with dirt and dust. It should NOT be facing the directional of travel when installed outside of a vehicle, or below the wading line. 400mm is the maximum length that the combustion inlet pipe should be.

The combustion air pipe and filter should not be installed where people will be, or in a position where it is picking up contaminated air from other sources.

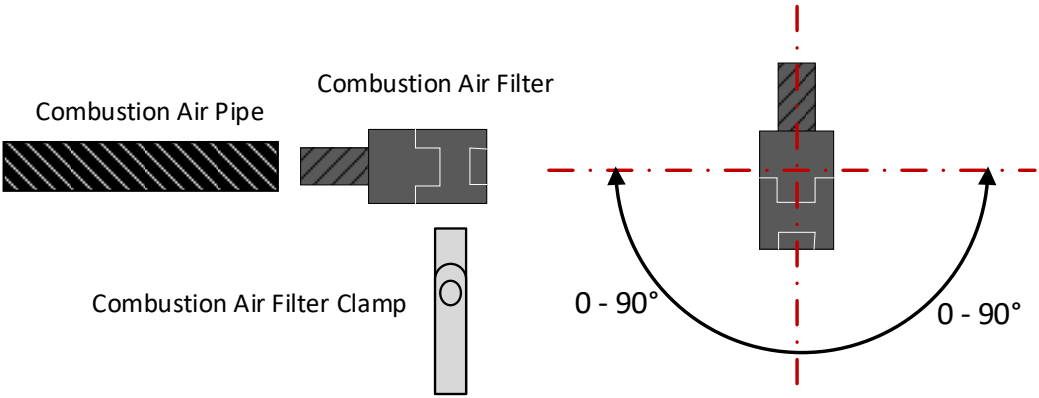

Figure VI

Make sure that the exhaust and any other parts that become hot during the operation of the heater are away from anything damaged by a high heat like wires, plastics or any body parts. Use insulation lagging where possible, but an air gap is still the best insulator from heat.

Also, please ensure that the exhaust **does not** exit in such a way that the fumes are re-circulated by the air inlet pipe or can be inhaled by anyone.

When the heater is operating, the exhaust will get hot, so make sure it is installed away from any parts that could get damaged by high temperatures. In vehicle installations, the exhaust vent should also point downward to the road surface with an angle of 90˚±10˚. This is best achieved by fixing a clamp 150mm from the pipe end.

Any exposed exhaust should be covered with a heat shield to prevent scalding.

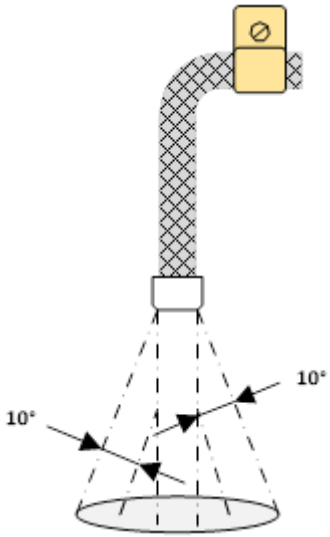

Figure VII

Fuel Lines

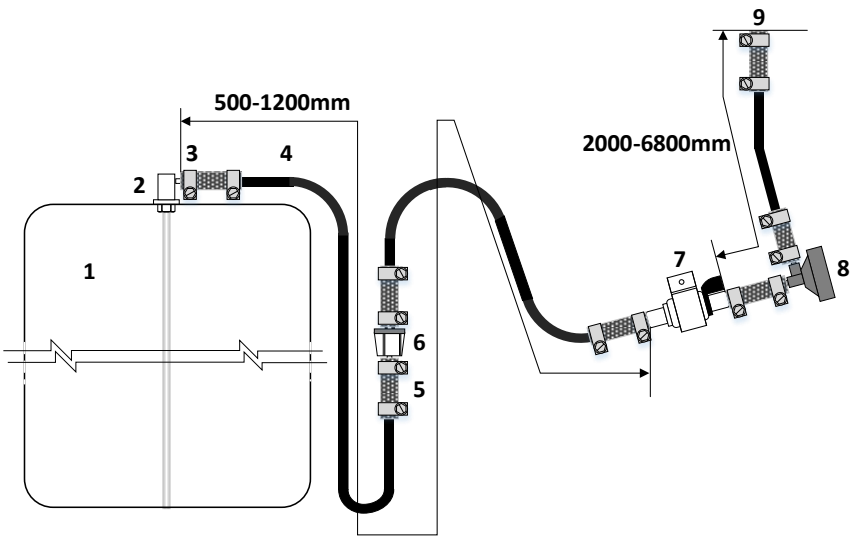

Figure VIII

1. Fuel Tank	**2.** Fuel Standpipe	**3.** Fuel line Hose Clamp
4. Fuel Line	**5.** Rubber Fuel connector	**6.** Fuel Filter
7. Fuel Pump	**8.** Fuel Pump Damper	**9.** To Heater

Always fit the fuel pump on the anti-vibration mount securely onto the vehicle. Ensure the outlet of the fuel pump tilts upward. The correct angle is shown in Figure IX.

Where possible the fuel line is ideally placed uphill to the fuel pump to ensure ideal bleeding of the fuel line.

Fuel Pump Angle & Suction Height

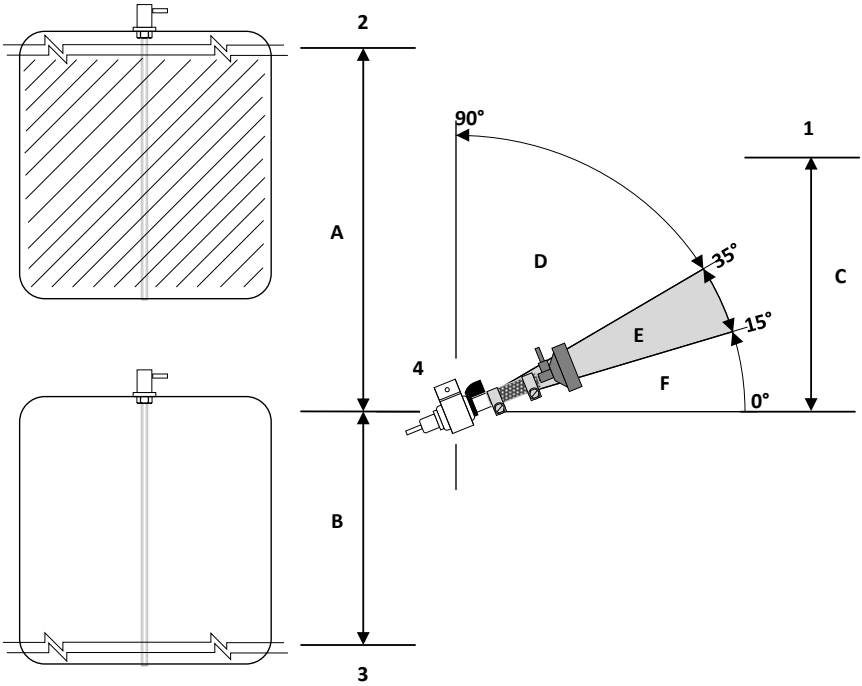

1. Heater Body
2. Max. Fuel Level
3. Min. Fuel Level
4. Fuel Pump and damper
A. 3000mm
B. 500mm
C. 2000m
D. Not acceptable
E. Acceptable (between 15-90°)
F. Not acceptable

Figure IX

Figure IX shows the ideal way to mount the fuel pump

The fuel pump's outlet should tilt upward at an angle between 15˚-35˚ (as shown above).

Fuel Line Connections

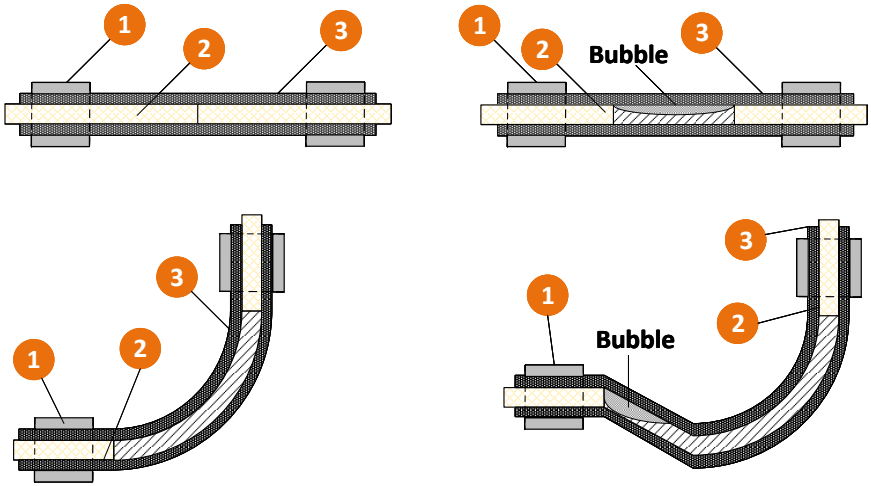

Correct **Wrong**

1. Fuel connector clamp **2.** Fuel Pipe **3.** Rubber fuel connector

Figure X

Figure X and XI show the correct way to connect fuel lines to prevent the build-up of air bubbles: Ensuring they are flush and minimising bends.

When the fuel is being sucked from the vehicle tank, or an independent tank, a fuel standpipe is required. Make sure all the openings are appropriate for the installation and a tight seal is maintained for the base of the standpipe (see pages 22-23).

The bottom of the suction pipe should be about 30-40mm from the bottom of the fuel tank, to avoid sucking impurities or sediment from the bottom.

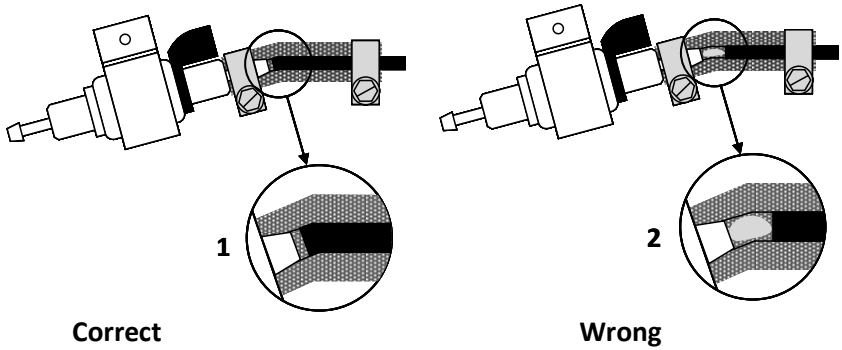

1. Flush – No Air Bubble **2.** Gap – Air Bubble Formed

Figure XI

Only use the fuel line provided, ensure the pipe is placed away from any possible debris and avoid any sagging in the line. Make sure the fuel line does not flow downward toward the fuel pump. This will prevent correct fuel flow and produce air bubbles in the line.

The fuel filter, fuel pipe and clamps should all be replaced after approximately 2 years of use.

Angle of Fuel Filter

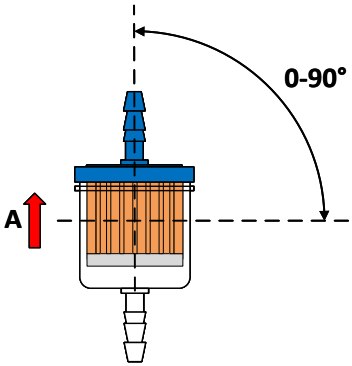

Figure XII shows the allowable, installations angle of the fuel filter, as well as the direction of fuel flow (arrow A). The filter should be fitted between the vehicles tank and the fuel pump.

Figure XII

Fuel Standpipe

A fuel standpipe (or suction pipe) will need to be installed in the vehicle's fuel tank or an independent fuel tank depending on what the installation calls for. Sealant is not required to fit the standpipes.

Depending on the standpipe provide in the kit you will need to install the standpipe in one of two ways.

Standpipe 1: (**Part No:** AHZ-034) **Figure XIII**

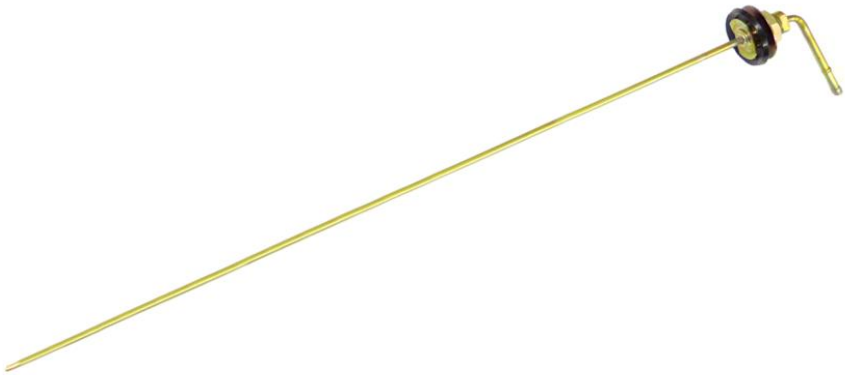

Usually supplied in Marine kits and supplied bent, this standpipe is installed like so:

- Drill a hole in the top of the vehicle's fuel tank Φ22 ± 0.2mm in size. Ensure it is smooth and clean of burrs
- Remove the top nut and washers and bend the standpipe straight
- Straighten the standpipe and cut it down to size if necessary
- Fit the standpipe by tilting it into position into the newly drilled hole
- Place the rubber and metal washers back on top followed by the nut and tighten it securely on top

Standpipe 2 (Sender Unit Pipe): (**Part No:** AHZ-035)

Figure XIV

Supplied mainly in vehicle kits, this standpipe (or sender unit pipe) is installed like so:

- If possible; remove the sender unit from the vehicle's fuel tank, this will make it easier to attach the nut securely back onto the standpipe
- Drill a Φ6 ± 0.2mm hole into the sender unit
- Remove the nut from the standpipe and feed the standpipe through the hole ensuring the rubber 'o' ring remains on the standpipe 'head' side
- Replace the nut on the standpipe to secure it safely to the sender unit.
- Replace the sender unit into the fuel tank.

The bottom of the fuel standpipe should be 30-40mm from the bottom of the fuel tank to allow enough suction of fuel and at the same time not allow impurities and sediment to be drawn up the standpipe.

Operation

On/Off Switch Layout

Manual On/Off operation switch with optional thermostatic control.

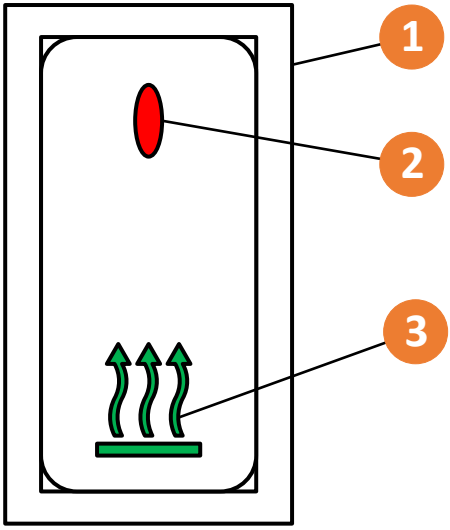

1. Manual On/Off Switch

2. Red Diagnostic Light

3. Green Operation Light

Figure XV

Figure XV shows the layout of the MX50 manual on/off switch. When the heater is turned on, the green light will remain stable throughout operation.

Fault information will display as a flashing red light from the diagnostic light. For more information, see **Fault Codes**.

Quick Reference Guide

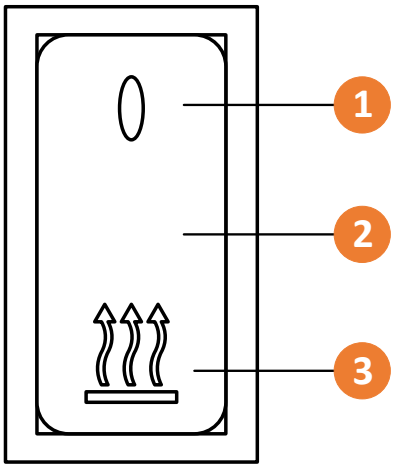

1. Position 1 (Top position) - **OFF**

2. Position 2 (Middle Position) – **Optional Thermostatic Control** with room thermostat. (See wiring diagram for installation)

3. Position 3 (Bottom Position) – **ON** The heater will run continuously from high to low power, until the control is switch to OFF.

Figure XVI

Use the manual on/off switch to operate the heater.

Press the switch to position 3 to turn the unit on.

The unit will continue to cycle from high power mode, to tick-over mode in this state.

To turn the unit off, simply press the switch into the top OFF position.

The middle position can be used if a separate thermostat is installed into the blue & yellow, separated wires. See wiring diagram overleaf for how to use with a separate room thermostat

Wiring Diagram

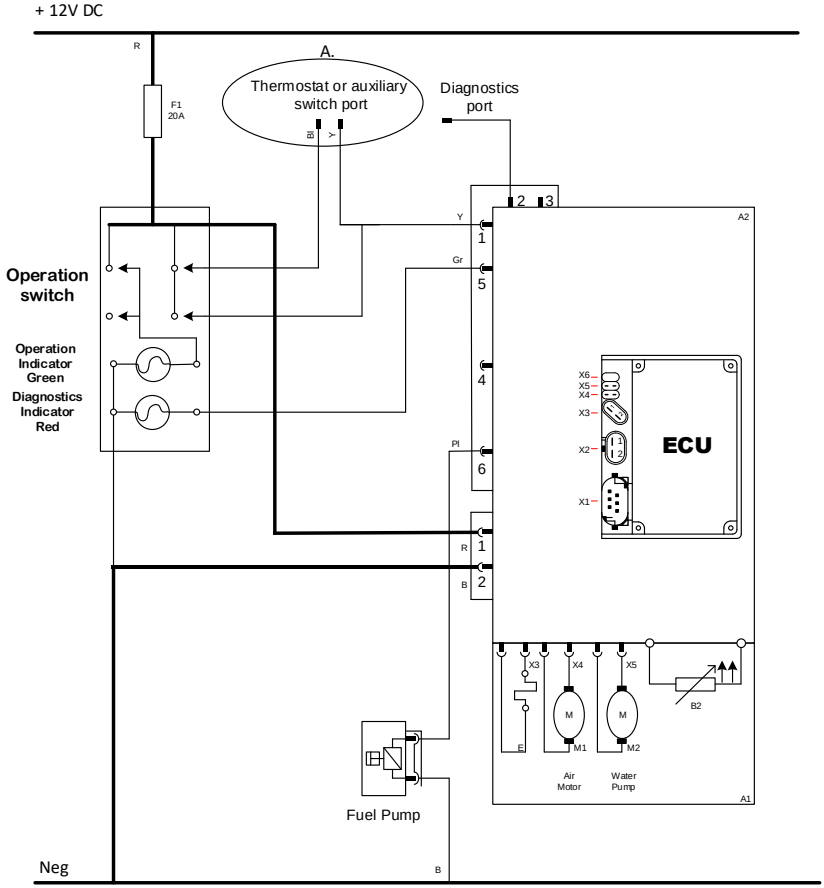

Heatmiser slimline B connection and operation.

1. Connect up as per diagram.
2. When heater operation switch is in position 1 (centre), the heater will be operated from the Heatmiser B.
3. When heater operation switch is in position 2, the Heater is in manual operation and the Heatmiser B has been overridden.

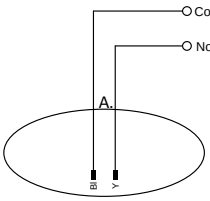

Heatmiser Slimline B contacts

Figure XVII

Maintenance

Once the heater is installed, it should ideally be turned on a few times to remove any air trapped in the fuel lines. Also ensure there is no leaking from the lines and that all electric terminals fit securely together.

You should also regularly:

- Check the air inlet and outlet for any pollution or foreign matters
- Clean the externals of the heater
- Check for corrosion or loose connections of the circuits
- Check the combustion air inlet and exhaust pipe for damage and clogs
- Check the fuel line for leaks

To ensure a long life of the heater it is advised that you run it for at least 10 minutes every month, to prevent malfunction of mechanical parts.

After 10 years the heat exchanger, overheat sensor and exhaust should be replaced by a professional.

If any welding is being attempted on the vehicle, please remove the positive power supply wire and earth it to protect the controller from any damage.

Fault Codes

MX50 Fault Display Table. The diagnostic light will flash five times. The flashing is divided into a long flash - 1 second (represented by 1). And a short flash - 0.2 seconds (represented by 0). There is an interval time of 0.5 seconds between flashes, and an interval time for each group of flashes (or code) of 3 seconds.

Fault	Fault Code	Fault Description
FAULT 00	00000	Flame sensor open circuit
FAULT 01	00001	Load short circuit
FAULT 02	00010	Voltage too high
FAULT 03	00011	Voltage too low
FAULT 04	00100	Flame sensor short circuit
FAULT 05	00101	Overheat sensor open circuit
FAULT 06	00110	Overheat sensor short circuit
FAULT 08	01000	Water Pump voltage high
FAULT 11	01011	Water temperature sensor short circuit
FAULT 12	01100	Water temperature sensor open circuit
FAULT 13	01101	Failure to ignite
FAULT 14	01110	Combustion disrupted
FAULT 18	10010	Glow pin open circuit
FAULT 19	10011	Glow pin voltage too high
FAULT 21	10101	Air motor voltage too high
FAULT 22	10110	Water pump current too high
FAULT 25	1101	Air pressure over low
FAULT 26	11010	Air pressure over high
FAULT 27	11011	Overheat
FAULT 29	11101	No rotation detected in air motor
FAULT 30	11110	Heater not cooling
FAULT 32	11111	No feedback signal detected